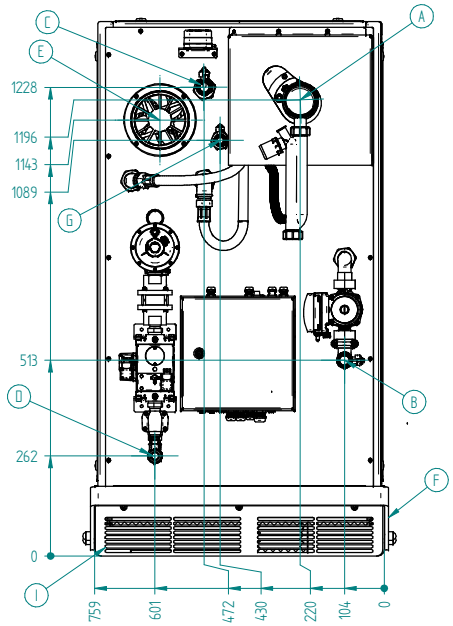

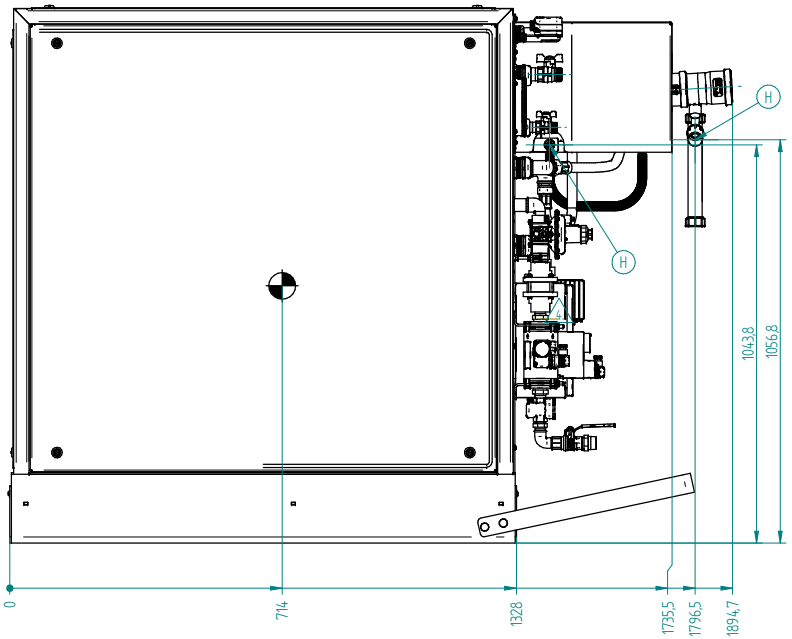

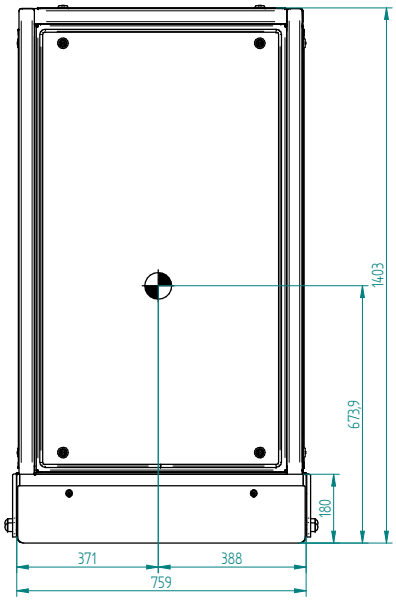

1:10

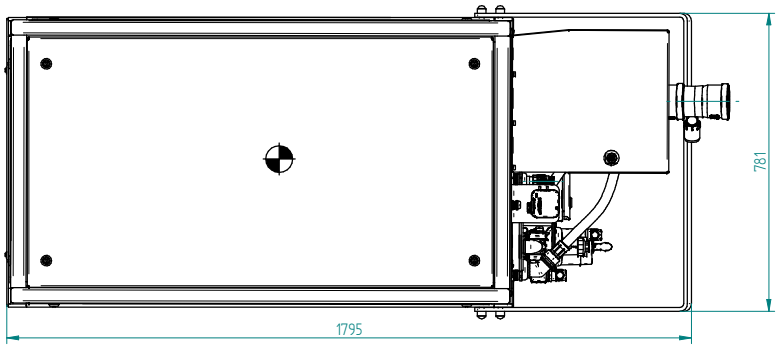

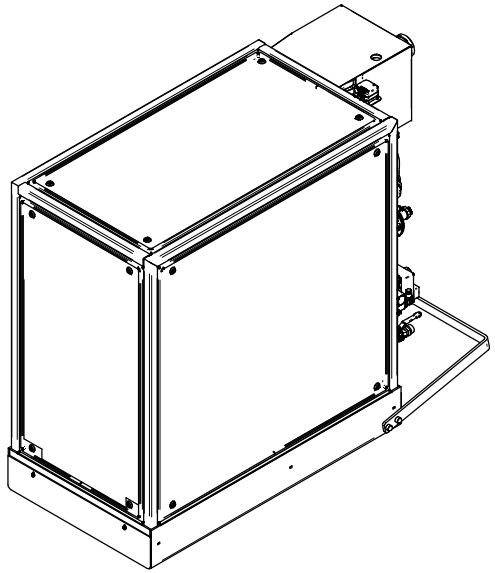

Deutsch

Position	Bezeichnung	Anschlusstyp
A	Abgas	DN80
B	Rücklauf	1" AG
C	Vorlauf	1" AG
D	Brenngas	1" AG
E	Abluft	DN 80
F	Schutzbügel (demontierbar)	
G	MAG Anschlussgruppe	3/4" AG
H	Kondensat	3/4" AG
I	Zuluft	

English

position	designation	connection type
A	flue gas	DN80
B	flow return	1" AG
C	flow heating	1" AG
D	fuel gas	1" AG
E	exhaust air	DN 80
F	transport protection (removable)	
G	expansion vessel	3/4" AG
H	condensate	3/4" AG
I	supply air	

ATTENTION!
Drawing data is for information purposes only! Information on outer dimensions and bending allowances do not dismiss the checker from inspection!

Tolerances according:

weight: 1045,33

scale: 1:7 particularity:

material:

	date	name
designer	20.01.2021	E-CKr
checked		
norm		

title: 17.0, 21.0 & 25.0kW (el) Biogas

This drawing must not be copied, forwarded, reproduced or otherwise used in any other way.

part number: 3011050

raw part number:

sheet: 1 / 2 sheets

ind.	modification	date	name

origin: 20.01.25 modification: 20.01.25 current index: 00 material thickness: